Engineering Release Notice (ERN)	Location	Change description	P/A: . Modified:	Document release status:
		Added Deleted MOdified	D: 2 . 1 Modified: NO	RELEASED
D-17317-87		ADDED SKETCHES FOR THE AC COMPRESSOR		Date 01/29/2018 Modification count

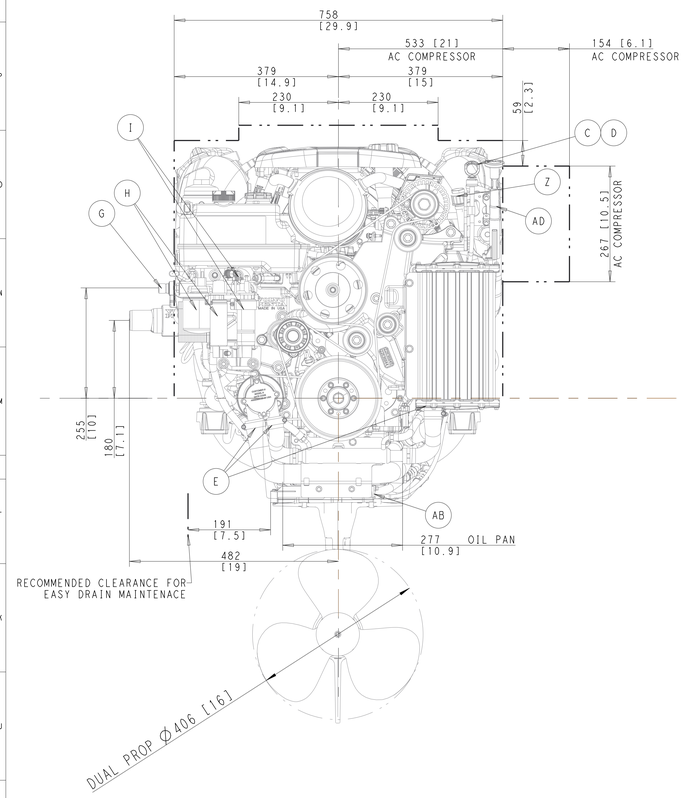

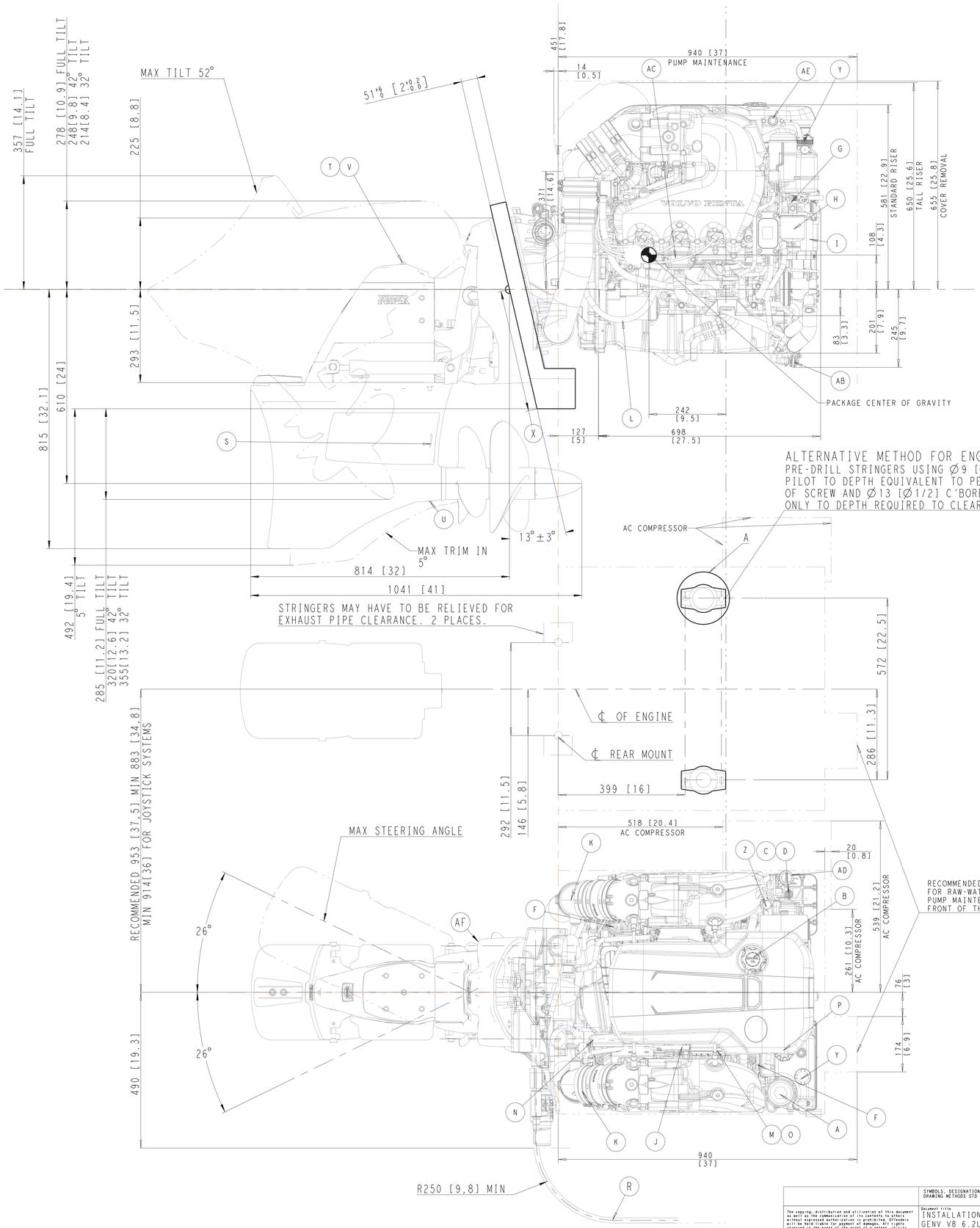

LETTER	NAME
A	OIL FILTER, ENGINE
B	OIL FILL, ENGINE
C	OIL DRAIN, ENGINE
D	OIL DIPSTICK, ENGINE
E	RAW WATER PUMP
F	LIFTING EYE
G	FUEL CONNECTION, I.D. 9,5 [3/8] NPT OR 6,35 [1/4] NPT
H	FUEL FILTER
I	ELECTRICAL FUEL PUMP
J	THROTTLE CABLE NON EVC
K	WATER COOLED EXHAUST PIPE
L	STARTER MOTOR
M	FUSE PANEL
N	ELECTRICAL CONNECTION ENGINE -INSTRUMENT PANEL
O	CIRCUIT BREAKER FOR TRIM PUMP
P	OIL FILL, POWER STEERING
R	STEERING CABLE
S	WATER INTAKE
T	OIL FILL, DRIVE UNIT
U	OIL DRAIN, DRIVE UNIT
V	OIL DIPSTICK, DRIVE UNIT
X	SEE INSTALLATION INSTRUCTIONS
Y	COOLANT FILL AND LEVEL CHECK
Z	ENGINE FLUSH
AC	ANODE, EXHAUST MANIFOLDS (BOTH SIDES)
AB	EASY DRAIN - VALVE
AD	EASY DRAIN HANDLE OPEN/CLOSE
AE	AUXILIARY STOP
AF	EXTERNAL ENGINE FLUSH

A

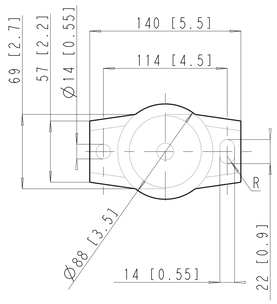

The copying, distribution and utilization of this document as well as the communication of its contents to others without express authorization is prohibited. Offenders will be held liable for payment of damages. All rights reserved in the event of the grant of a patent, utility model or ornamental design registration.

VOLVO PENTA

SYMBOLS, DESIGNATIONS AND GENERAL DRAWING METHODS STD 101-0005.

Document title
INSTALLATION DRAWING
GENV V8 6.2L, FWD

Document type

Owner domain:Document prefix

Document No	Issue index	Sheet No
23097750	02	1[1]

SIZE A4