Engineering Release Notice (ERN)	Location	Change description		P/A: . Modified: D: 3 . 2 Modified: NO	Document release status: RELEASED
		Added: Deleted:	MiNes		Date / Modification count

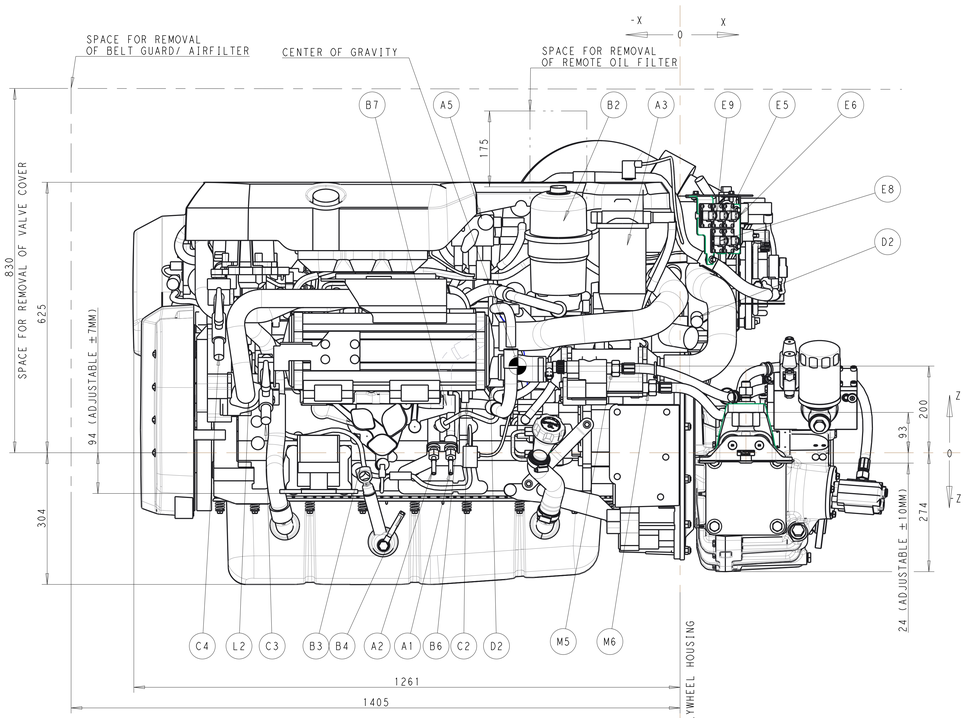

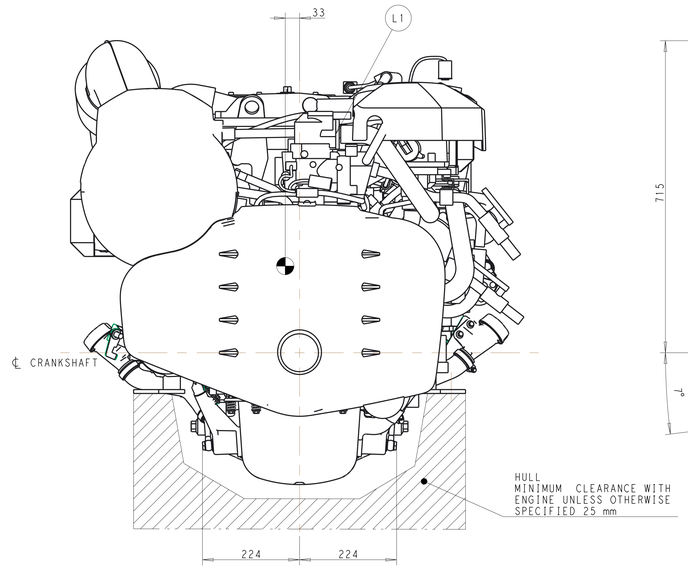

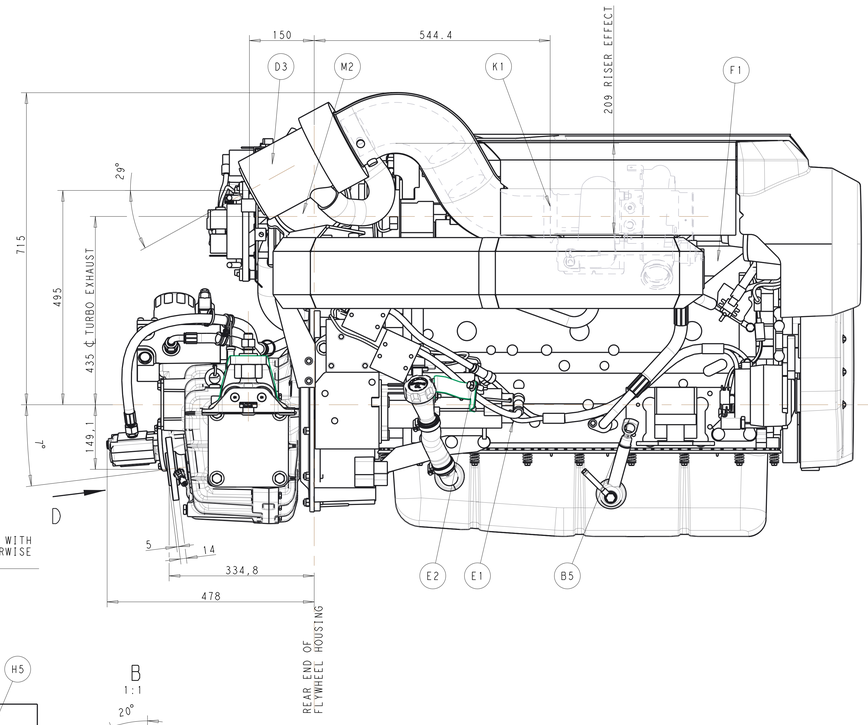

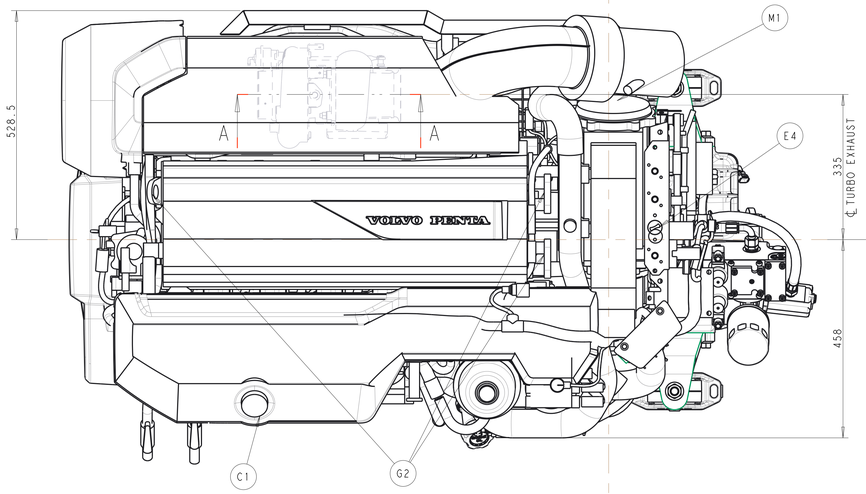

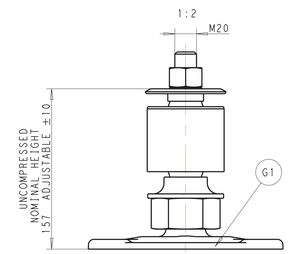

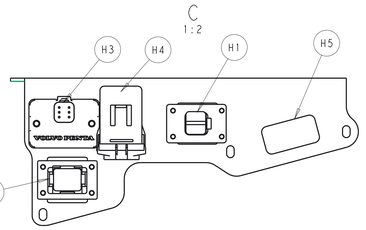

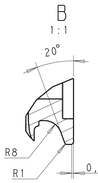

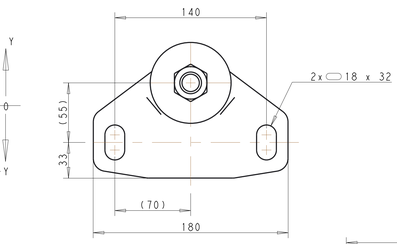

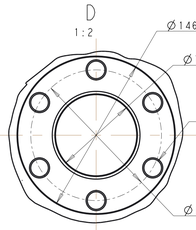

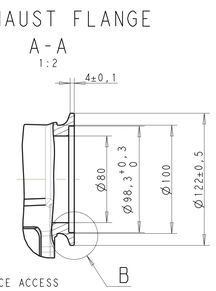

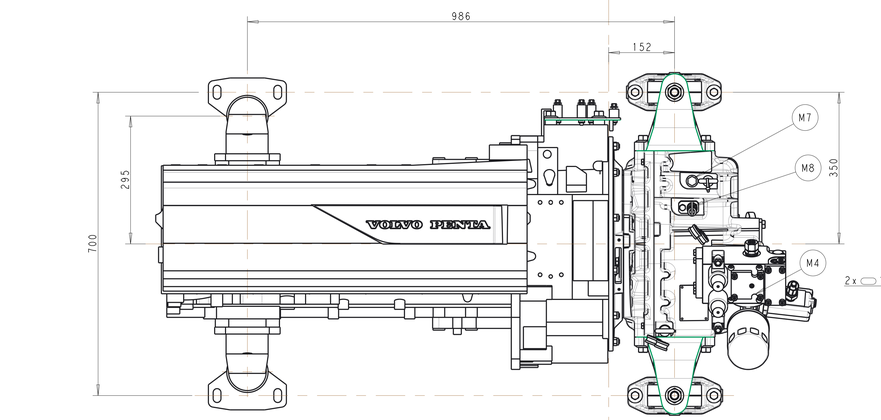

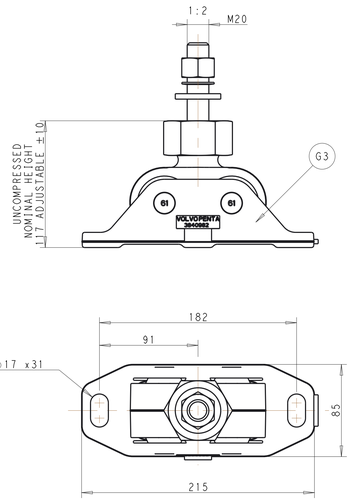

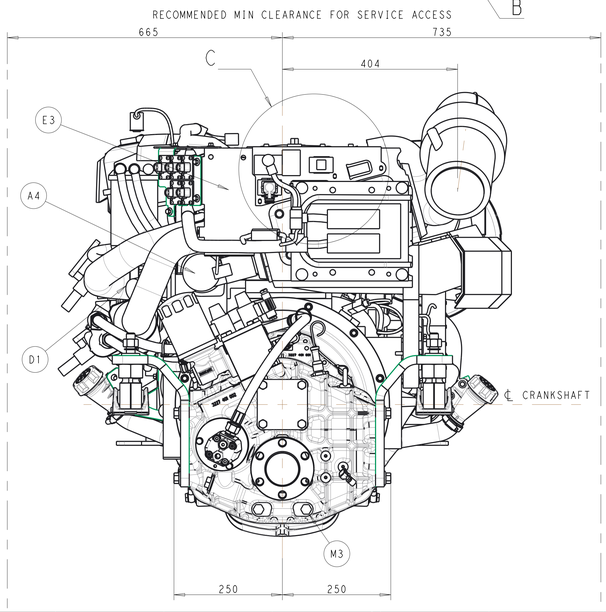

		X	Y	Z
A1	FUEL CONNECTION INLET. 550mm HOSE WITH 24° TAPERED CONNECTION WITH SWIVEL FITTING. ACC TO DIN 20078 - 9,5mm(3/8"1 M18x1,5 12mm (INTERNAL THREAD)	-530	-235	-50
A2	FUEL CONNECTION OUTLET. 550mm HOSE WITH 24° TAPERED CONNECTION WITH SWIVEL FITTING. ACC TO DIN 20078 - 9,5mm(3/8"1 M18x1,5 12mm (INTERNAL THREAD)	-570	-235	-50
A3	FUEL FILTER			
A4	SEA WATER PUMP			
A5	HAND PUMP			
B2	OIL FILTER			
B3	OIL DIPSTICK ENGINE			
B4	OUTLET FOR OIL BILGE PUMP .12mm / 1/2 ID . HOSE PORT ALT.STARBOARD			
B5	OIL DIPSTICK ENGINE(OPTION)			
B6	OIL COOL INLET	-520	-190	115
B7	OIL COOL OUTLET	-570	-175	180
C1	FRESH WATER FILLER (EXPANSION TANK)			
C2	FRESH WATER DRAIN POINT			
C3	CONNECTION HOT WATER INLET R 1/2" (OPTION)	-955	-465	25
C4	CONNECTION HOT WATER OUTLET R 1/2" (OPTION)	-1055	-505	220
D1	SEA WATER INLET FOR Ø52mm/2" ID HOSE.CAN BE TURNED 360° (ID Ø44)			
D2	SEA WATER DRAIN POINT (2x)			
D3	WET EXHAUST CONNECTION Ø152mm/6" ID HOSE			
E1	CONNECTION BATTERY POS. +	-460	260	15
E2	CONNECTION BATTERY NEG-	-380	305	60
E3	ECU CONTROL UNIT			
E4	AUXILIARY STOP			
E5	DATALINK			
E6	SENSERS			
E7	AUX			
E8	AUX			
E9	DIAGNOSE 1			
F1	AIR FILTER			
G1	ELASTIC SUSPENSION (2x)			
G2	LIFTING EYE (3x)			
G3	ENGINE BRACKET (2X)			
H1	DIAGNOSE 2	165	90	555
H2	CONN.A	165	-30	500
H3	CONN.B	180	-35	565
H4	RELAY			
H5	EATS N/A			
K1	TURBO FLANGE			
L1	COOLANT INLET	-1100	-84	505
L2	COOLANT OUTLET	-1005	-280	135
M1	TEMPARATURE SENSOR, EXHAUST RISER	75	310	560
M2	TEMPARATURE SENSOR, RISER OUTLET	-25	415	510
M3	OIL DRAIN TRANSMISSION	295	55	-245
M4	EMERGERNCY SHIFTING			
M5	OIL INLET ON OIL COOLER (ISO-G 1/2)	-160	-430	200
M6	OIL OUTLET ON OIL COOLER (ISO-G 1/2)	-75	-400	150
M7	OIL FILL TRANSMISSION			
M8	OIL DIPSTICK TRANSMISISON			

SCALE 1:5

SYMBOLS, DESIGNATIONS AND GENERAL DRAWING METHODS STD 101-0005

The copying, distribution and utilization of this document as well as the communication of its contents to others without express authorization is prohibited. Offenders will be held liable for payment of damages. All rights reserved in the event of the grant of a patent, utility model or ornamental design registration.

Document title: ENGINE DIMENSIONS D8 IB ZF286A

Document type: DIMENSION DRAWING

Owner domain:Document prefix

VOLVO PENTA

Document No	Issue index	Sheet No
22863265	03	1(1)