Engineering Release Notice (ERN)	Location	Change description		P/A: . Modified: D: 9 . 3 Modified: NO	Document release status: **RELEASED**
		Added: Deleted:	MiMos		Date / Modification count

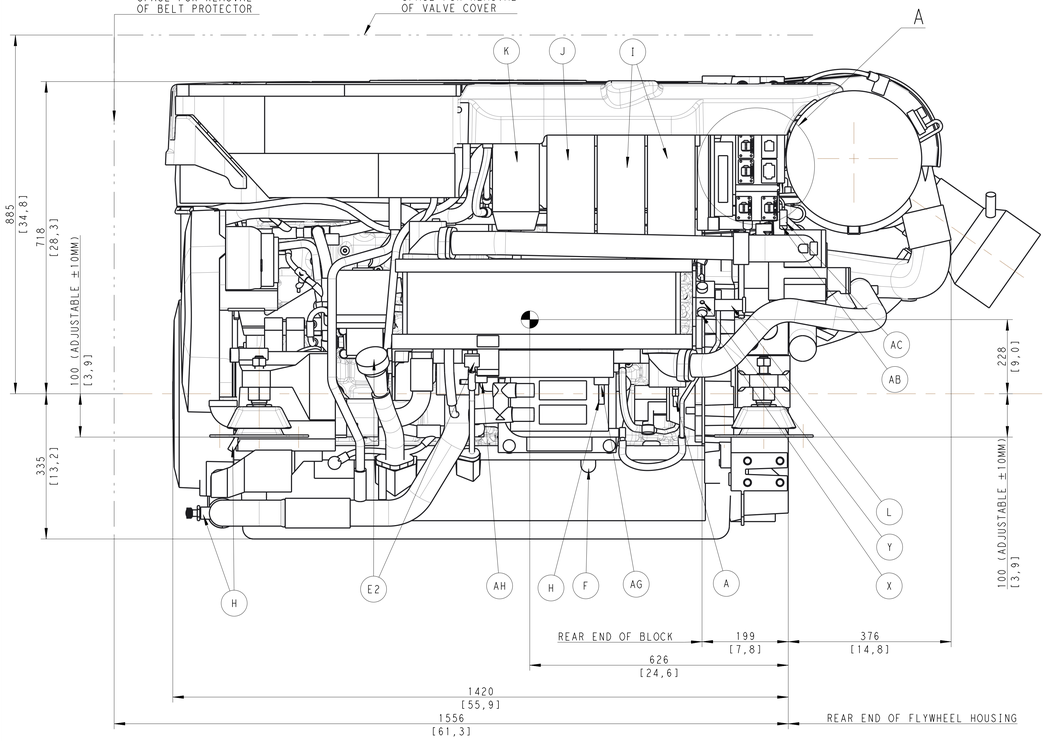

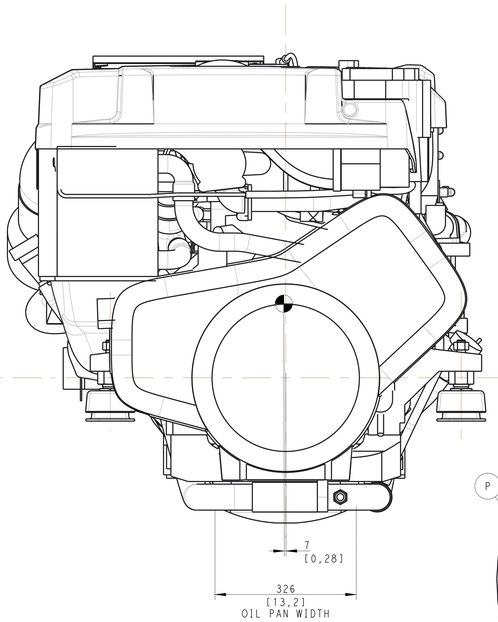

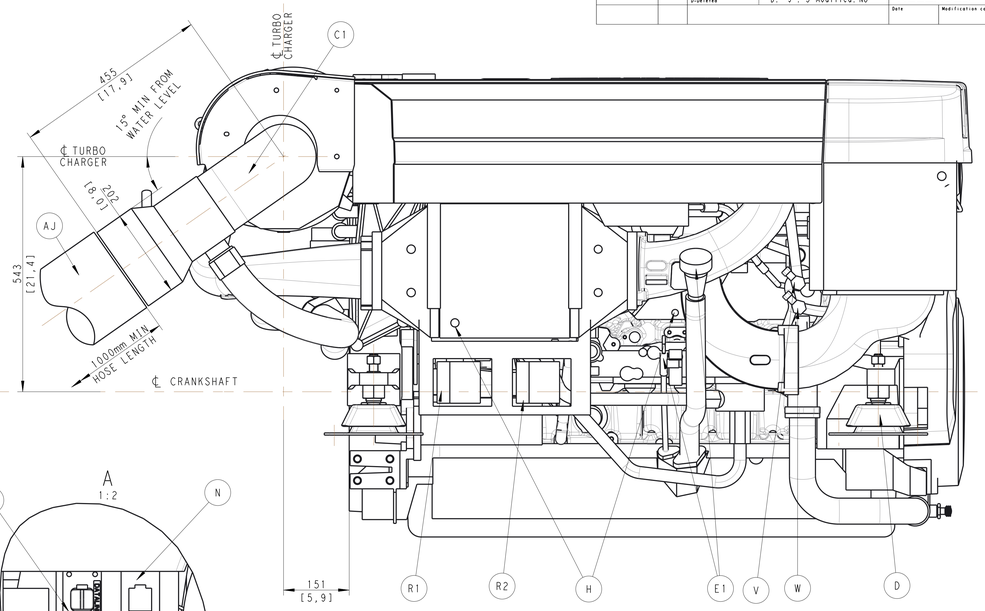

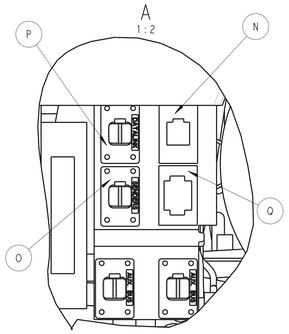

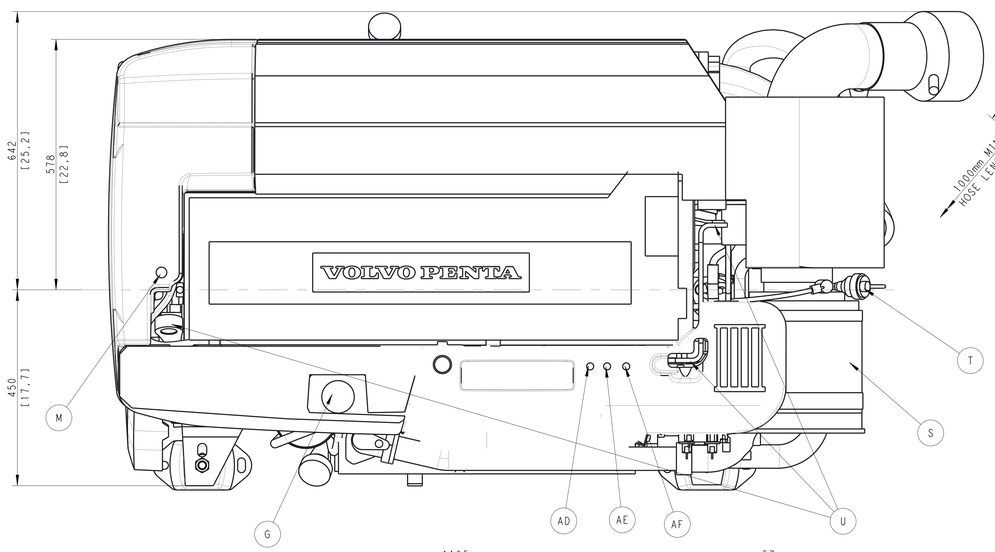

RISER OPTION 2

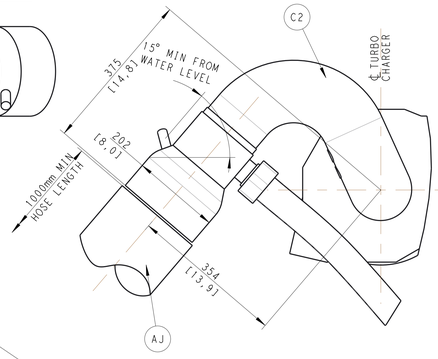

EXHAUST FLANGE
1:2

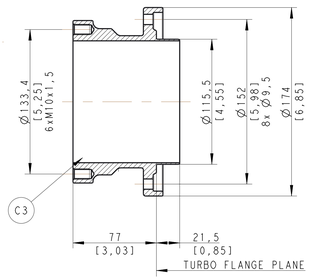

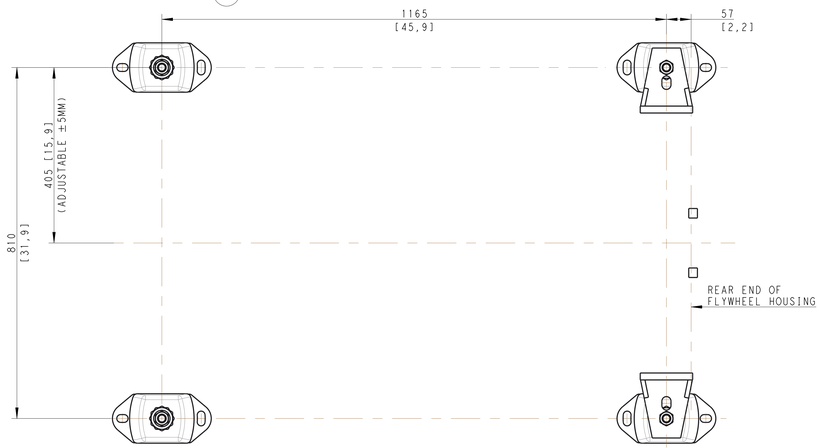

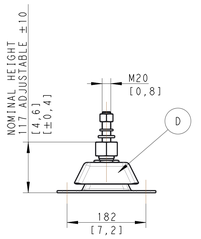

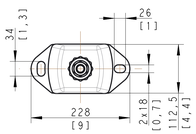

RECOMMENDED MIN CLEARANCE FOR SERVICE ACCESS

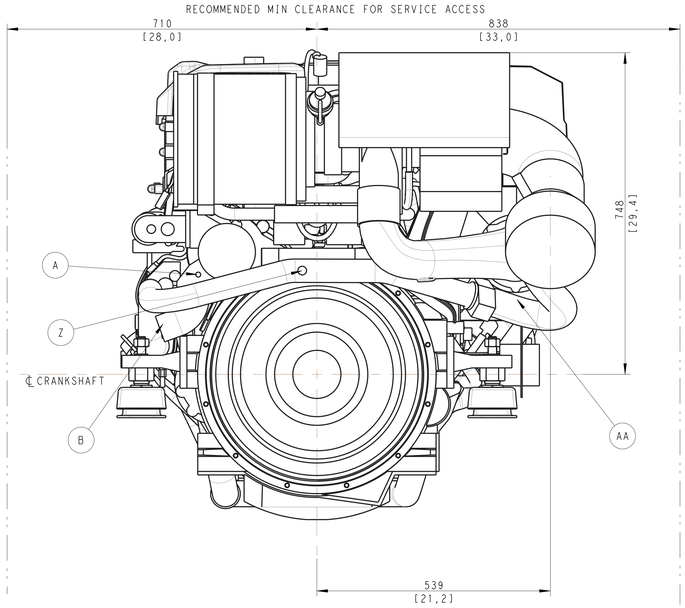

A SEA WATER DRAIN POINT, x2
B SEA WATER INLET, CONNECTION FOR 63 mm (2 1/2") I.D. HOSE
C1 WET EXHAUST BEND, OPTION 1
C2 WET EXHAUST BEND WITH RISER, OPTION 2
C3 EXHAUST FLANGE, OPTION 3, MAX LOAD 9KG
D FLEXIBLE SUSPENSION, STANDARD EQUIPMENT
E1 OIL DIPSTICK AND FILLING ENGINE STARBOARD SIDE ALTERNATIVE
E2 OIL DIPSTICK AND FILLING ENGINE PORT SIDE ALTERNATIVE
F OUTLET FOR OIL BILGE PUMP (M18x1,5)
G FRESH WATER FILLING (EXPANSION TANK)
H FRESH WATER DRAIN POINT (x5)
I OIL FILTER 2x
J BYPASS OIL FILTER
K FUEL FILTER/ WATER SEPARATOR
L PRIMER PUMP
M FUEL DEAIRATION
N DIAGNOSIS CONNECTION (6-POLE)
O CONNECTION SENDERS (6-POLE)
P DATALINK CONNECTION (6-POLE)
Q CONNECTION EVC (REVERSE GEAR)(32-POLE)
R1 CONNECTION BATTERY POS.
R2 CONNECTION BATTERY NEG.
S AIR FILTER
T PRESSURE DROP INDICATOR, AIR FILTER
U LIFTING EYE, 3x (Ø30 MIN. FRONT EYE REMOVABLE)
V HOSE CONNECTION HOT WATER OUTLET R1/2" I.D. HOSE, OPTIONAL EQUIPMENT
W HOSE CONNECTION HOT WATER INLET R1/2" I.D. HOSE, OPTIONAL EQUIPMENT
X FUEL CONNECTION INLET 1/4"-18 NPTF
Y FUEL CONNECTION OUTLET 1/4"-18 NPTF
Z PRESSURE LUBRICATION OF PROP SHAFT (1/4-18NPSF)
AA SEA WATER OUTLET FOR 2 1/8" I.D. HOSE (O.D. 54mm)
AB EXTERNAL STOP CONNECTION
AC CAN2 CONNECTION
AD AUTOMATIC FUSE, 10A (ENGINE)
AE STOP BUTTON
AF AUTOMATIC FUSE, 10A (EVC)
AG OIL INLET OIL COOLER (ISO-G 1/2)
AH OIL OUTLET OIL COOLER (ISO-G 1/2)
AJ HOSE WET EXHAUST I.D. 8" (205mm)

SCALE 1:5
WET WEIGHT 1660KG (WITH OIL AND WATER)
DRY WEIGHT 1560KG (WITH OUT OIL AND WATER)
DIMENSIONS IN MILLIMETRE AND INCHES

SYMBOLS, DESIGNATIONS AND GENERAL DRAWING METHODS STD 101-0005

The copying, distribution and utilization of this document as well as the communication of its contents to others without express authorization is prohibited. Offenders will be held liable for payment of damages. All rights reserved in the event of the grant of a patent, utility model or ornamental design registration.

VOLVO PENTA

Document title: ENGINE DIMENSIONS D13B-A MP BOBTAIL
Document type: DIMENSION DRAWING
Owner domain/Document prefix:
Document No: 21316549 | Issue index: 09 | Sheet No: 1(1) | SIZE A4